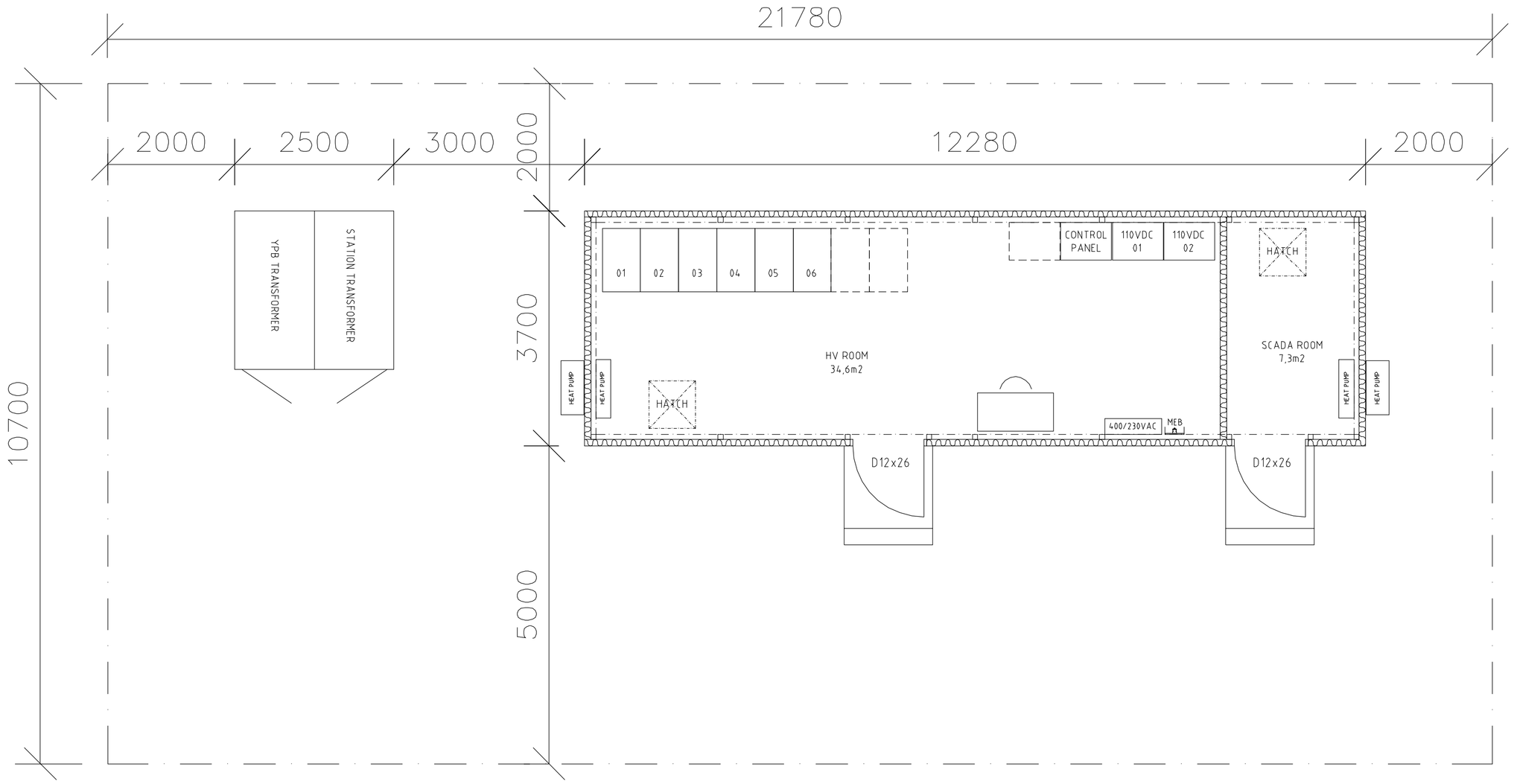

VEO

AVDELN. DEPART.	E	MÅLEST. SCALE	A3/1:100
PLAN.EGG. PREPADED	JN		
DATO DATE	25.10.2018	TEGNET DRAWN	JN
KONTROLL CHECKED	AP	GODKJENT APPROVED	JL

HARAM WINDFARM
33kV SUBSTATION

SUBSTATION LAYOUT

KODE CODE	–	BETEGNELSE IDENT	–

ARB.NR. PROJ.NO	KE.21413		
BLAD SHEET	1	FORTS. CONTIN.	–
TEGN.NR DRAW.NO	S1001		REV. –
CAD FIL CAD FILE	S1001.dwg		

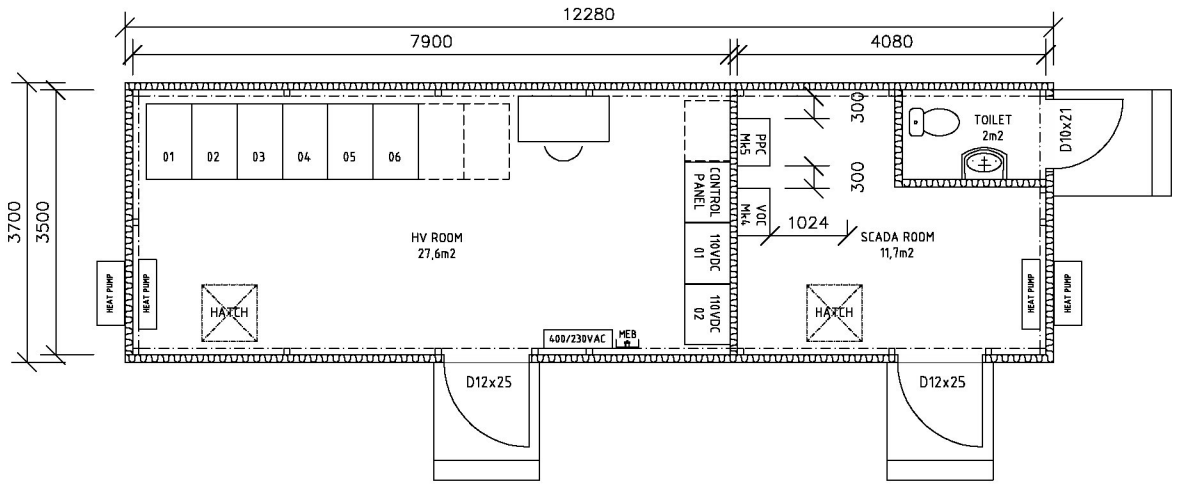

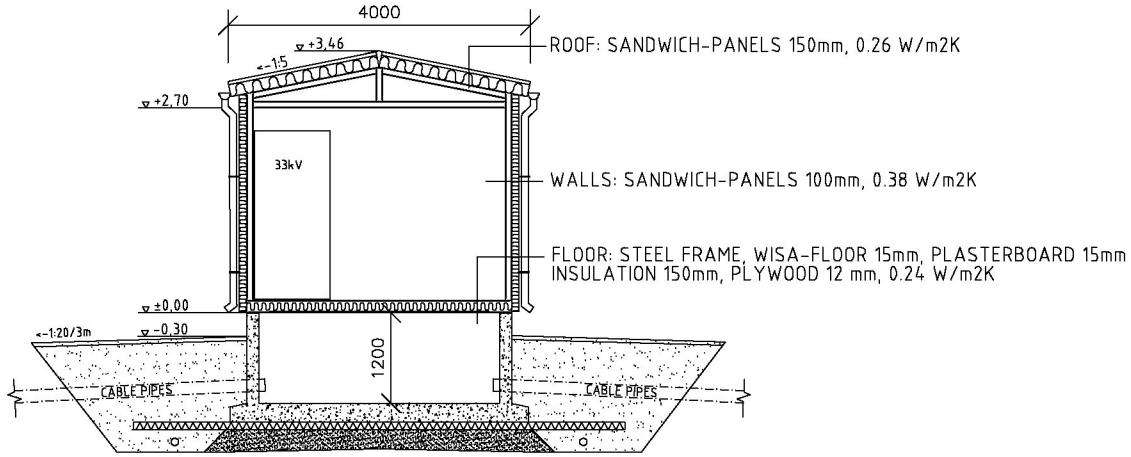

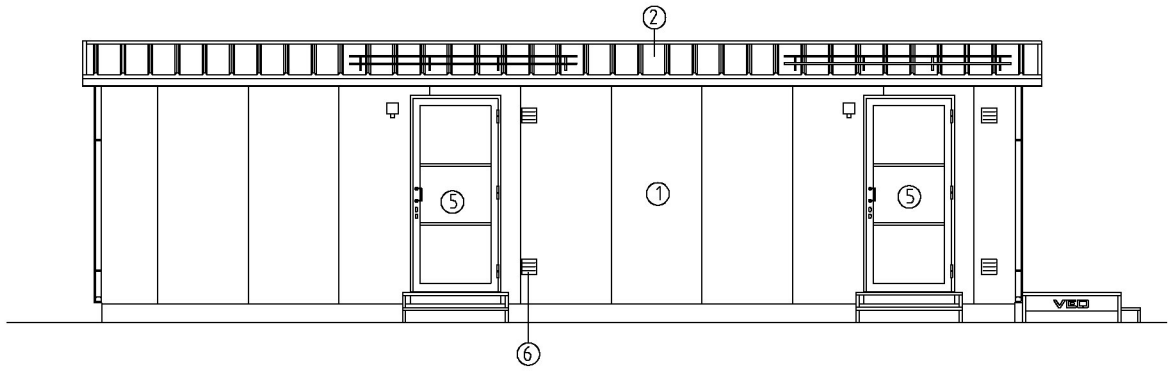

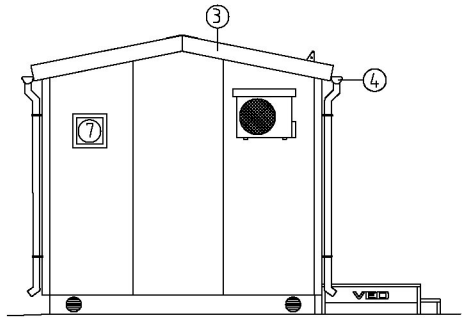

MATERIALS:

1. WALL:
   SANDWICH PANEL 100mm (Steel-Minaralwool-Steel)
   CORROSION CLASS: C5
   COLOUR: RAL9006
2. ROOF:
   SANDWICH PANEL 150mm (Steel-Minaralwool-Steel)
   CORROSION CLASS: C5
   COLOUR: RAL7016

3. SKIRTINGS & STEEL SHEETS
   METAL THICKNESS 0,5mm, STAINLESS STEEL
   CORROSION CLASS: C5
   COLOUR: RAL7016

4. RAIN GUTTERS & DOWNSPOUTS
   CORROSION CLASS: C5
   COLOUR: RAL7016

5. DOORS:
   STEEL/PLATE: C5
   COLOUR: RAL7016

6. VENTILATION FRAMES
   GALVANIZED STEEL

7. PRESSURE RELIEF HATCH
   GALVANIZED STEEL

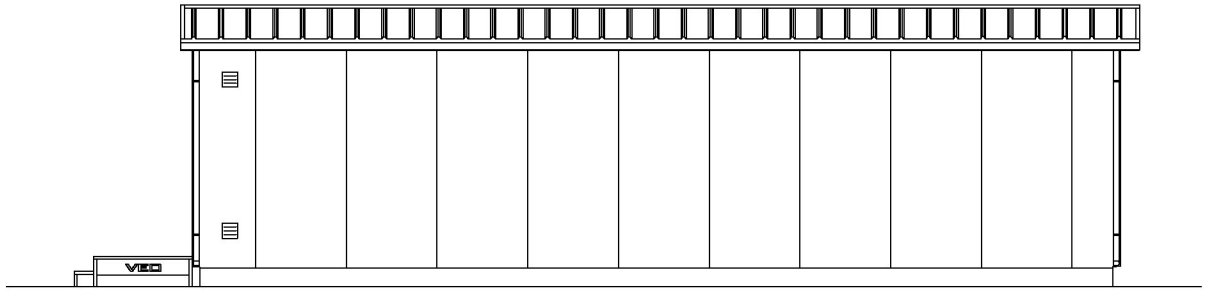

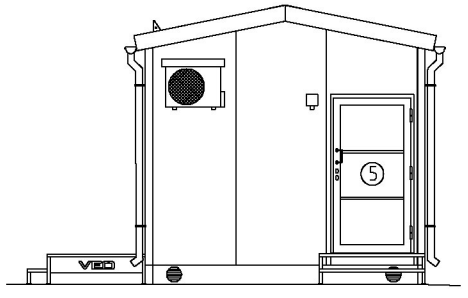

VEO	AVDELN. DEPART. E	MÅLEST. SCALE A3/1:100	HARAM WINDFARM 33kV SUBSTATION	SUBSTATION BUILDING PLAN, SECTION & FACADES TOILET OPTION	ARB.NR. PROJ.NO KE.21413
	PLAN.EGG. PREPADED MRa				BLAD SHEET 1 / FORTS. CONTIN. –
	DATO DATE 15.1.2018	TEGNET DRAWN MRa			TEGN.NR DRAW.NO S1080 / REV. –
	KONTROLL CHECKED AP	GODKJENT APPROVED JL		KODE CODE – / BETEGNELSE IDENT –	CAD FIL CAD FILE S1080.dwg

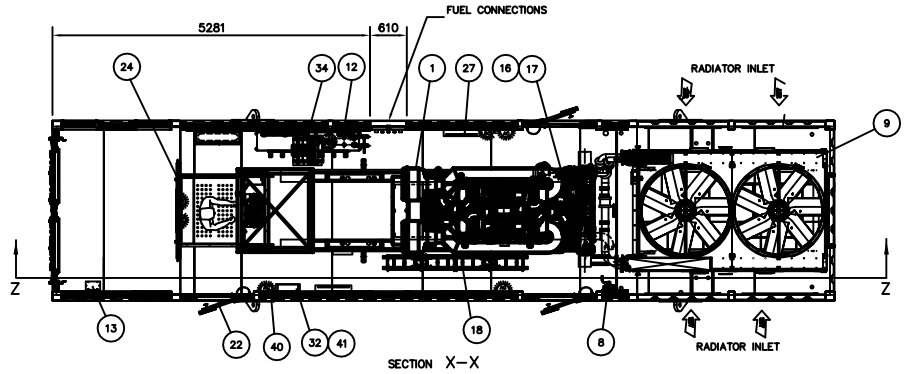

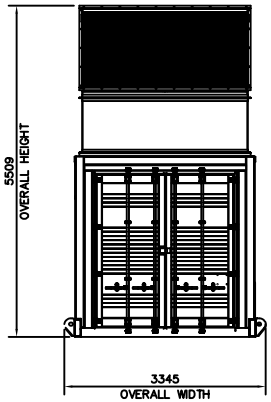

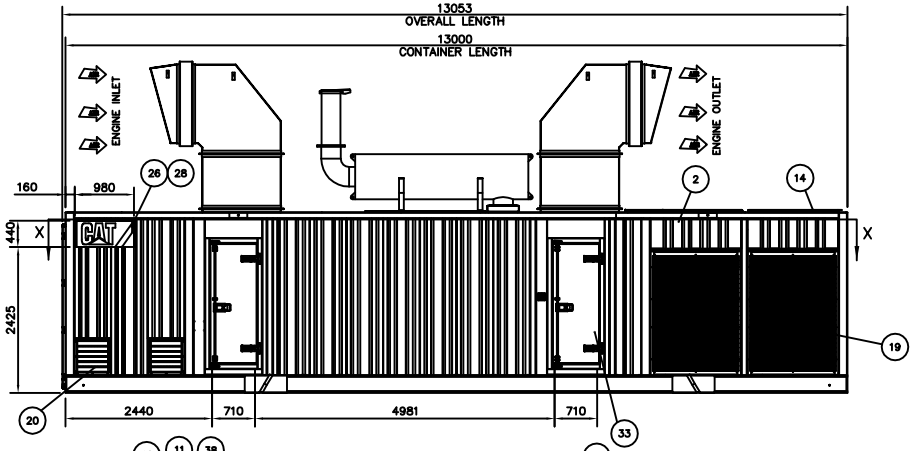

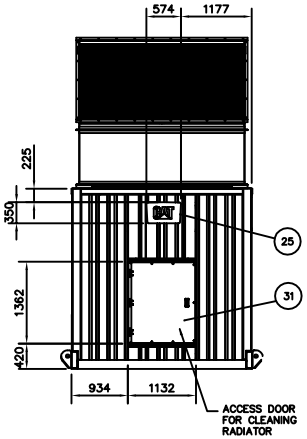

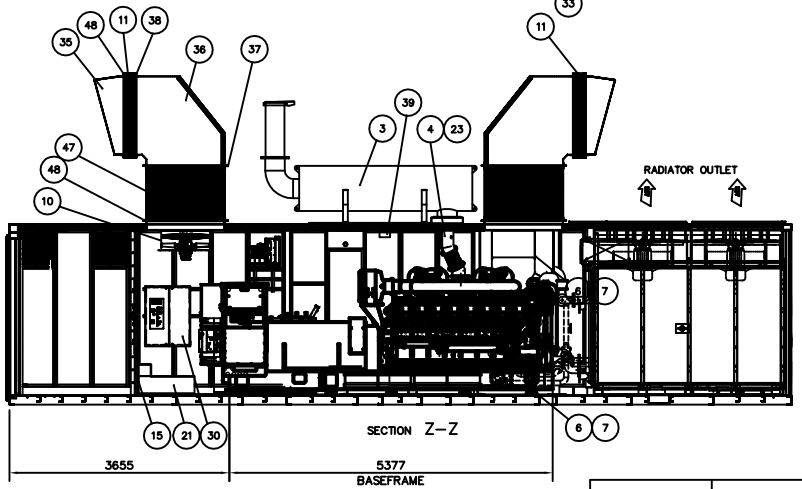

	ITEM	QTY.	DESCRIPTION	PART NUMBER
	1	1	3516B–HD OPENSET (CODE 516DE92)	–
#	2	1	ENCLOSURE ASSEMBLY	492–4769
	3	1	EXHAUST SYSTEM ASSEMBLY	492–0555
	4	1	EXHAUST PIPEWORK BLANKET KIT	459–6407
*	5	1	CRANKCASE BREATHER GROUP	MGS6593
	6	10	ANTI–VIBRATION MOUNT LOGGERS	591–311
	7	10	ANTI–VIBRATION MOUNT PAD	MGC8478
	8	1	RADIATOR TOP–UP PUMP GROUP	MGS6137
	9	1	RADIATOR MODULE	489–3983
	10	2	NUAIRE COOLING FAN	492–0505
	11	2	MOTORISED LOUVRE	492–0504
	12	1	FUEL TANK ASSY	492–0506
	13	1	GLAND PLATE	492–4791
	14	1	RADIATOR ROOF GUARD	382–5028
	15	1	GLAND PLATE	492–4788
	16	1	JACKET WATER PIPEWORK KIT	MGS7394
	17	1	SECONDARY WATER PIPEWORK KIT	459–6400
	18	4	BATTERY	9X–9730
	19	4	RADIATOR SIDE GRILLE	386–2749
#	20	4	LOUVRE ASSY	492–4795
#	21	1	CABLE STEP ASSY	492–4792
	22	3	CONTAINER DOOR STAY GROUP	GOA2386
#	23	2	EXHAUST CLOSING PLATE	459–6408
	24	1	BULKHEAD CLOSING PLATE ASSY	492–4789
	25	1	CAT DECAL – END	303–3430
	26	2	CAT DECAL – POWER EDGE	303–3444
	27	2	SPACE HEATER 2KW	645–020
	28	2	SIDE DECAL MOUNTING PLATE	433–8958
#*	29	2	EXHAUST OPENING COVER (TRANSPORT)	459–6394
	30	1	MOTOR/TEMP CONTROL PANEL	MDA1901
#	31	1	ACCESS PANEL	382–5023
	32	1	MARSHALLING PANEL (IF REQUIRED)	MDS4185, MDC7340
#	33	3	DOOR (CAM LOCK)	465–6392
	34	1	FUEL COOLER	MGS7217
#	35	2	INLET/OUTLET WEATHER HOOD	492–0497
#	36	2	INLET/OUTLET DUCT BEND	492–0483
#	37	2	INLET/OUTLET ATTENUATION DUCT	492–0476
	38	8	DUCT GASKET	492–0503
	39	1	ROOM TEMPERATURE SENSOR	468–3513
	40	1	DOUBLE OUTLET SOCKET	610–935
	41	1	DISTRIBUTION BOARD	553–081

* ITEM NOT SHOWN

PARTS SUPPLIED BY BAY K

ISSUE	DESCRIPTION	ECR/DCR	BY	DATE
	FIRST ISSUE	–	L.F.	05/08/15

TOLERANCES EXCEPT WHERE OTHERWISE STATED
0 – 500mm ± 1mm
500 – 2000mm ± 2mm
OVER 2000mm ± 3mm
STRUCTURAL ± 3mm
ANGULAR ± 1°

DO NOT SCALE

THIS DRAWING IS COPYRIGHTED AND MAY BE COPIED ONLY FOR THE PURPOSES OF MAINTAINING THE PURCHASED EQUIPMENT BY THE PURCHASER

ALL DIMENSIONS IN MILLIMETRES UNLESS OTHERWISE STATED

3rd ANGLE PROJECTION

DRN. BY L.FERGUSON
DATE 05/08/15
APPD. BY
DATE

TITLE
CAT 3516B–HD
13x3x3M DTO CONTAINER 85dBA@1m

SHEET SIZE	ORIGINAL SCALE	DRAWING NO.	ISSUE
A1	1:45	492–4787	00